6 & 12 Volt Monobloc GEL Range

Haze Battery Company Ltd

The Haze HZY - GEL range covers Ah capacities from 7Ah to 230Ah (C_{10}) with dimensions suitable for racking systems for maximum space utilisation.
Specially designed racks and cabinets are available with cables and connectors to suit.
GEL is especially suited for non-premium sites with medium to frequent outage rates and non-climate controlled environments, for less extreme temperature variations and reduced cyclic demands please consult the Haze HZB - AGM range.
Haze facilities are fully accredited to ISO 14001 and the management system fully accredited to ISO 9001.

QUALITY ASSURED FIRM
ISO 9001
SGS

UKAS
QUALITY MANAGEMENT
005

Specifications

Nominal Voltage	6 & 12 Volts
Design Life	12 Years
Operating Temperature	-20 ˚C to 50 ˚C
Grid alloy	Calcium / Tin lead alloy
Plates	Flat Pasted
Separator	Microporous Duroplastic
Active material	Very high purity lead
Case and cover	ABS (VO on request)
Charge Voltage	Float 2.27 - 2.30 VPC @20 ˚C Cycling 2.4 @20 ˚C Max. 2.4 VPC Max ripple 3.5% Charge V
Electrolyte	Sulphuric acid Analytical grade purity
Venting Valve	EPDM Rubber 1.5 to 2 psi (10.5 - 14 KPa) release pressure. Resealing at 1 psi (7 KPa)
Terminal	Various types Epoxy sealed by extended mechanical paths
Torque setting	The recommended torque value for all types is 5-7 Nm
Cables	Insulated cables / connectors supplied on request.

Haze Battery Company keenly encourages environmental awareness; PLEASE follow guidelines for the recycling /disposal of lead.

Innovative Features

Designed to meet the needs of UPS and other applications where power outages are frequent and a cyclic UPS battery is required.

- Completely maintenance free, sealed
- Construction eliminates the need for watering
- Electrolyte will not stratify.
- Increased durability and deep cycle ability for heavy demand applications
- Special formation process
- Gelled thixotropic electrolyte
- Spill proof / leak proof
- Valve regulated Max internal pressure 2.5 psi
- Multi-position usage
- Multi-cell container
- ABS Case and cover - V0 on request
- Low self discharge
- Utilising the latest in European technology
- FAA and IATA approved as non-hazardous

SYSTEM CERTIFICATION
ISO 14001:2004

Gel Vs AGM

Each battery has its advantages and disadvantages, it is therefore important to choose the right battery for the application. Advantages of Gel Batteries:

- Full recovery from deep discharge, even when the battery is not recharged immediately.
- Ideal for repeat cycling daily use.
- Excellent performance over long discharges
- Good tolerance to higher temperature applications
- Suitable where mains power is unstable
- Zero stratification due to immobilized electrolyte
- Reduced self-discharge
- Limiting design protects the positive plates to greatly improve cycle life
- Improved charge acceptance due to low internal resistance
- High resistance to water loss with the right charging set up
- Ultra stable polymer separator with glass mat for increased performance
- High resistance to shorting due to superior mechanical strength of the polymer separator
- Increased tolerance to poor charging parameters
- Can be discharged even when full recharge has not been achieved, without loss of battery capacity

Disadvantages

- Reduced high rate autonomy
- Requires cycling to achieve full capacity

Terminal Options (left to right)

- Lead Flag
- Automotive
- J Type
- Copper Flag
- J Type Adapter
- Insert

Insert are made from brass with copper, nickel and silver plating giving excellent mechanical, electrical and corrosion resistant properties.

	Capacity temperature correction Factor to be applied to Data at 20 Degrees C												
Discharge Time	-30 °C	-20 °C	-10 °C	0 °C	5 °C	10 °C	15 °C	20 °C	25 °C	30 °C	35 °C	40 °C	50 °C
5 minutes to 59 minutes	0.23	0.417	0.605	0.778	0.86	0.91	0.96	1	1.037	1.063	1.085	1.1	1.116
1 Hour to 100 Hours	0.277	0.464	0.647	0.816	0.886	0.93	0.97	1	1.028	1.05	1.063	1.07	1.078

Applications

- Float service
- Residential
- Telecommunications
- Refrigeration
- Poor charging applications
- Frequent use applications
- Wind
- Higher ambient temperature applications
- Water Pumping
- Road side cabinets
- Cathodic Protection

Many other extreme applications

CHARGING CHARACTERISTICS

Floating - The optimum float voltage for a battery is temperature dependant, at 15 - 24°C the recommended value is 2.27 - 2.30V. It is recommended that battery installation sites are temperature controlled, however float voltage can be increased or decreased to compensate for temperature variations. Adjustment is calculated at +/- 3 mV per degree C.

Operating Temperature	Recommended Applied Float Voltage VPC
0-9	2.33 - 2.35
10-14	2.30 - 2.33
15-19	2.27 - 2.30
20-24	2.27 - 2.30
25-29	2.25 - 2.27
30-34	2.23 - 2.25
35-40	2.21 - 2.23

The most suitable charging method for battery life and performance is the constant voltage method with a limited initial current, usually limited to a maximum of $C_{20}/4$. For cyclic use we specify a short constant current phase at the end of normal charging, consult Haze for further details.

End of Discharge Voltage = 1.85 — **DISCHARGE CURRENT in A** — **20 - 25 °C**

Model	5'	10'	15'	20'	25'	30'	35'	40'	45'	1 hr	90'	2 hr	3 hr	4 hr	5 hr	6 hr	7 hr	8 hr	10 hr	12 hr	20 hr
HZY6-7.5	16.1	11.2	8.98	7.60	6.59	5.95	5.46	5.07	4.76	4.05	2.89	2.29	1.64	1.30	1.07	0.92	0.81	0.73	0.61	0.52	0.33
HZY6-10	22.9	16.1	13.0	11.0	9.6	8.54	7.69	7.17	6.68	5.46	3.94	3.15	2.23	1.74	1.44	1.24	1.09	0.98	0.81	0.69	0.44
HZY6-12	27.8	19.4	15.6	13.2	11.5	10.1	9.20	8.50	7.86	6.49	4.66	3.66	2.64	2.08	1.72	1.48	1.30	1.16	0.97	0.83	0.53
HZY12-7.5	16.1	11.2	8.98	7.60	6.59	5.95	5.46	5.07	4.76	4.05	2.89	2.29	1.64	1.30	1.07	0.92	0.81	0.73	0.61	0.52	0.33
HZY12-12	27.8	19.4	15.6	13.2	11.5	10.1	9.20	8.50	7.86	6.49	4.66	3.66	2.64	2.08	1.72	1.48	1.30	1.16	0.97	0.83	0.53
HZY12-18	42.9	29.4	23.6	19.8	17.4	15.6	14.1	13.0	11.9	9.68	6.91	5.46	3.86	3.03	2.53	2.16	1.91	1.71	1.42	1.20	0.76
HZY12-26	62.4	45.0	36.1	30.4	26.3	23.2	20.8	18.9	17.3	14.0	10.1	8.11	5.87	4.63	3.82	3.25	2.83	2.54	2.06	1.77	1.13
HZY12-33	89.2	60.1	47.4	39.2	33.7	29.6	26.5	24.0	21.9	17.6	12.8	10.2	7.37	5.88	4.90	4.24	3.75	3.34	2.80	2.42	1.57
HZY12-44	105	81.5	64.2	52.9	45.4	39.9	35.7	32.2	29.5	23.6	17.2	13.7	9.84	7.71	6.34	5.42	4.77	4.26	3.54	3.03	1.95
HZY12-55	135	97.5	78.7	66.8	58.0	51.5	46.4	42.1	39.0	31.6	22.9	18.1	13.0	10.3	8.55	7.33	6.44	5.74	4.73	4.04	2.57
HZY12-60	173	128	100	82.2	69.3	60.0	52.9	47.6	43.1	33.9	24.6	19.7	14.4	11.7	9.93	8.73	7.78	7.03	5.95	5.12	3.29
HZY12-70J	155	119	98.1	82.8	72.0	63.6	57.5	52.6	48.3	39.0	27.8	21.6	15.2	12.0	9.96	8.55	7.49	6.68	5.50	4.73	3.08
HZY12-70	159	124	102	86.9	75.6	66.7	60.3	55.2	50.9	42.7	31.1	24.4	17.6	14.0	11.6	10.0	8.84	7.93	6.59	5.65	3.69
HZY12-80	166	128	108	92.4	81.4	73.1	66.4	61.6	56.8	46.6	33.6	26.5	18.8	14.7	12.2	10.5	9.20	8.20	6.80	5.85	3.78
HZY12-100	222	165	133	112	97.7	86.7	78.2	71.2	65.0	52.6	38.3	30.2	21.3	16.8	13.9	12.0	10.7	9.57	7.97	6.89	4.53
HZY12-110	241	179	147	125	109	97.0	87.3	78.9	72.3	58.5	42.5	34.0	24.4	19.3	16.2	13.9	12.2	11.0	9.11	7.86	5.10
HZY12-120	247	188	154	132	116	103	92.6	85.0	78.3	63.4	46.5	36.8	25.9	20.1	16.6	14.3	12.5	11.2	9.31	7.98	5.24
HZY12-135	292	213	183	161	145	132	121	111	102	83.4	60.4	47.9	34.7	27.6	22.9	19.6	17.2	15.3	12.6	10.8	6.95
HZY12-150	310	236	200	175	158	142	129	117	108	86.1	62.6	49.3	34.8	27.2	22.4	19.2	16.9	15.1	12.4	10.7	6.84
HZY12-160	326	253	221	195	172	155	141	128	117	94.7	70.6	57.0	41.4	32.9	27.3	23.4	20.4	18.2	15.0	12.8	8.22
HZY12-200	365	296	256	228	206	185	168	153	141	116	87.0	71.5	53.4	42.5	35.4	30.3	26.6	23.7	19.6	16.7	10.6
HZY12-230	376	307	267	240	218	199	184	171	159	131	96.7	77.6	56.8	44.9	37.2	32.1	28.2	25.3	20.9	17.9	11.3
HZY6-110	274	207	169	144	125	110	97.3	88.0	80.6	63.6	45.8	36.7	26.7	21.2	17.6	15.1	13.3	11.9	9.88	8.44	5.29
HZY6-155	259	232	203	179	160	146	133	123	114	94.8	71.1	57.6	41.4	32.5	27.2	23.5	20.9	18.8	15.8	13.7	8.93
HZY6-160	376	277	229	193	173	156	146	135	126	103	74.6	58.8	41.9	32.8	27.1	23.3	20.5	18.3	15.1	12.9	8.12
HZY6-200	354	285	244	214	195	178	165	150	139	112	81.3	64.9	46.8	36.9	30.5	26.1	22.9	20.7	17.1	14.7	9.52

End of Discharge Voltage = 1.80 — **DISCHARGE CURRENT in A** — **20 - 25 °C**

Model	5'	10'	15'	20'	25'	30'	35'	40'	45'	1 hr	90'	2 hr	3 hr	4 hr	5 hr	6 hr	7 hr	8 hr	10 hr	12 hr	20 hr
HZY6-7.5	17.2	11.9	9.59	8.12	7.04	6.35	5.83	5.41	5.09	4.32	3.08	2.44	1.75	1.39	1.15	0.99	0.87	0.78	0.65	0.56	0.35
HZY6-10	24.4	17.2	13.9	11.8	10.2	9.12	8.22	7.66	7.13	5.83	4.21	3.36	2.38	1.86	1.54	1.32	1.17	1.04	0.86	0.74	0.47
HZY6-12	29.7	20.8	16.6	14.1	12.3	10.8	9.8	9.08	8.40	6.94	4.98	3.91	2.82	2.22	1.84	1.58	1.39	1.24	1.03	0.88	0.56
HZY12-7.5	17.2	11.9	9.59	8.12	7.04	6.35	5.83	5.41	5.09	4.32	3.08	2.44	1.75	1.39	1.15	0.99	0.87	0.78	0.65	0.56	0.35
HZY12-12	29.7	20.8	16.6	14.1	12.3	10.8	9.8	9.08	8.40	6.94	4.98	3.91	2.82	2.22	1.84	1.58	1.39	1.24	1.03	0.88	0.56
HZY12-18	45.8	31.5	25.2	21.2	18.6	16.6	15.0	13.8	12.7	10.3	7.38	5.83	4.13	3.24	2.70	2.31	2.04	1.82	1.51	1.29	0.82
HZY12-26	66.6	48.0	38.6	32.4	28.1	24.8	22.2	20.2	18.5	14.9	10.8	8.66	6.27	4.94	4.08	3.47	3.03	2.72	2.20	1.89	1.21
HZY12-33	95.3	64.2	50.6	41.9	36.0	31.6	28.3	25.6	23.4	18.8	13.7	10.9	7.87	6.28	5.23	4.53	4.00	3.57	2.99	2.58	1.67
HZY12-44	112	87.0	68.6	56.5	48.5	42.6	38.2	34.4	31.5	25.2	18.4	14.6	10.5	8.24	6.77	5.79	5.10	4.55	3.78	3.23	2.09
HZY12-55	145	104	84.1	71.4	62.0	55.1	49.6	45.0	41.7	33.7	24.4	19.3	13.9	11.0	9.13	7.83	6.88	6.14	5.05	4.31	2.75
HZY12-60	184	137	107	87.8	74.0	64.1	56.5	50.8	46.0	36.2	26.3	21.0	15.4	12.5	10.6	9.32	8.31	7.51	6.35	5.47	3.51
HZY12-70J	166	127	105	88.4	76.9	68.0	61.4	56.2	51.6	41.6	29.7	23.1	16.2	12.8	10.6	9.13	8.00	7.13	5.88	5.05	3.29
HZY12-70	170	132	109	92.8	80.7	71.3	64.4	59.0	54.3	45.6	33.2	26.1	18.7	14.9	12.4	10.7	9.44	8.47	7.04	6.04	3.94
HZY12-80	177	137	115	98.7	87.0	78.1	70.9	65.8	60.7	49.8	35.9	28.3	20.1	15.7	13.1	11.2	9.83	8.75	7.27	6.25	4.04
HZY12-100	237	176	142	119	104	92.6	83.6	76.1	69.4	56.2	40.9	32.2	22.8	17.9	14.9	12.8	11.4	10.2	8.51	7.36	4.84
HZY12-110	258	191	157	134	117	104	93.3	84.2	77.2	62.4	45.4	36.3	26.1	20.6	17.3	14.9	13.1	11.7	9.73	8.39	5.45
HZY12-120	264	200	164	141	124	110	99	90.8	83.6	67.7	49.7	39.3	27.7	21.5	17.8	15.2	13.4	11.9	9.94	8.53	5.59
HZY12-135	311	228	195	172	155	141	129	118	109	89.1	64.5	51.2	37.1	29.5	24.4	20.9	18.3	16.4	13.4	11.5	7.43
HZY12-150	331	252	214	187	168	152	138	125	115	92.0	66.9	52.6	37.2	29.1	24.0	20.5	18.1	16.1	13.3	11.4	7.31
HZY12-160	349	270	236	208	184	166	151	136	125	101	75.5	60.9	44.2	35.2	29.1	25.0	21.8	19.5	16.1	13.7	8.78
HZY12-200	389	316	273	244	220	197	179	163	150	123	92.9	76.4	57.0	45.4	37.8	32.4	28.4	25.4	20.9	17.9	11.3
HZY12-230	401	328	285	257	233	213	197	182	170	140	103	82.9	60.7	47.9	39.8	34.2	30.1	27.0	22.3	19.1	12.1
HZY6-110	293	221	181	154	133	117	104	94.0	86.1	67.9	49.0	39.2	28.5	22.6	18.8	16.2	14.2	12.7	10.6	9.02	5.65
HZY6-155	307	254	220	193	171	154	140	129	120	98.3	73.4	59.2	42.5	33.5	27.9	24.2	21.4	19.3	16.2	14.0	9.19
HZY6-160	402	296	245	206	185	167	156	144	135	110	79.7	62.8	44.8	35.1	29.0	24.9	21.9	19.6	16.1	13.7	8.68
HZY6-200	378	304	261	229	208	190	176	161	148	119	86.8	69.4	49.9	39.4	32.6	27.9	24.5	22.1	18.3	15.7	10.2

End of Discharge Voltage = 1.75 — **DISCHARGE CURRENT in A** — **20 - 25 °C**

Model	5'	10'	15'	20'	25'	30'	35'	40'	45'	1 hr	90'	2 hr	3 hr	4 hr	5 hr	6 hr	7 hr	8 hr	10 hr	12 hr	20 hr
HZY6-7.5	18.3	12.7	10.2	8.64	7.49	6.76	6.21	5.76	5.41	4.60	3.28	2.60	1.87	1.48	1.22	1.05	0.93	0.83	0.69	0.59	0.38
HZY6-10	26.0	18.3	14.8	12.5	10.9	9.7	8.74	8.15	7.59	6.20	4.48	3.58	2.53	1.98	1.64	1.41	1.24	1.11	0.92	0.78	0.51
HZY6-12	31.6	22.1	17.7	15.0	13.0	11.5	10.5	9.66	8.93	7.38	5.30	4.16	3.00	2.36	1.96	1.68	1.47	1.32	1.10	0.94	0.60
HZY12-7.5	18.3	12.7	10.2	8.64	7.49	6.76	6.21	5.76	5.41	4.60	3.28	2.60	1.87	1.48	1.22	1.05	0.93	0.83	0.69	0.59	0.38
HZY12-12	31.6	22.1	17.7	15.0	13.0	11.5	10.5	9.66	8.93	7.38	5.30	4.16	3.00	2.36	1.96	1.68	1.47	1.32	1.10	0.94	0.60
HZY12-18	48.8	33.5	26.9	22.5	19.7	17.7	16.0	14.7	13.5	11.0	7.85	6.20	4.39	3.45	2.87	2.46	2.17	1.94	1.61	1.37	0.87
HZY12-26	70.9	51.1	41.1	34.5	29.9	26.4	23.6	21.5	19.7	15.9	11.5	9.21	6.67	5.26	4.34	3.69	3.22	2.89	2.35	2.01	1.28
HZY12-33	101	68.3	53.8	44.6	38.3	33.6	30.1	27.2	24.9	20.0	14.6	11.6	8.37	6.68	5.57	4.81	4.26	3.80	3.18	2.74	1.78
HZY12-44	119	92.6	73.0	60.1	51.6	45.3	40.6	36.6	33.5	26.8	19.6	15.5	11.2	8.76	7.20	6.16	5.42	4.84	4.02	3.44	2.22
HZY12-55	154	111	89.5	75.9	65.9	58.6	52.7	47.9	44.3	35.9	26.0	20.6	14.8	11.7	9.72	8.33	7.31	6.53	5.37	4.59	2.92
HZY12-60	196	146	114	93.4	78.8	68.2	60.1	54.1	49.0	38.5	28.0	22.3	16.4	13.3	11.3	9.92	8.85	7.99	6.76	5.82	3.74
HZY12-70J	177	135	111	94.1	81.8	72.3	65.3	59.8	54.9	44.3	31.6	24.6	17.3	13.6	11.3	9.72	8.51	7.59	6.25	5.38	3.50
HZY12-70	181	141	116	98.7	85.9	75.9	68.5	62.7	57.8	48.5	35.3	27.8	19.9	15.9	13.2	11.4	10.0	9.01	7.49	6.42	4.19
HZY12-80	189	146	123	105	92.5	83.1	75.4	70.1	64.5	53.0	38.2	30.1	21.4	16.7	13.9	11.9	10.5	9.31	7.73	6.65	4.30
HZY12-100	253	187	151	127	111	98.5	88.9	81.0	73.9	59.8	43.5	34.3	24.2	19.1	15.8	13.7	12.1	10.9	9.06	7.83	5.15
HZY12-110	274	204	167	142	124	110	99.2	89.6	82.1	66.4	48.3	38.6	27.8	21.9	18.4	15.8	13.9	12.4	10.4	8.93	5.80
HZY12-120	281	213	175	150	132	117	105	96.6	88.9	72.0	52.9	41.8	29.4	22.9	18.9	16.2	14.2	12.7	10.6	9.07	5.95
HZY12-135	331	242	207	183	165	150	137	126	116	94.8	68.6	54.4	39.4	31.4	26.0	22.3	19.5	17.4	14.3	12.3	7.90
HZY12-150	353	268	227	199	179	162	147	133	122	97.9	71.1	56.0	39.6	31.0	25.5	21.8	19.2	17.2	14.1	12.1	7.78
HZY12-160	371	288	252	222	196	176	160	145	133	108	80.3	64.8	47.1	37.4	31.0	26.6	23.2	20.7	17.1	14.6	9.35
HZY12-200	414	336	290	259	234	210	191	174	160	131	98.9	81.3	60.6	48.3	40.2	34.4	30.2	27.0	22.3	19.0	12.0
HZY12-230	427	349	303	273	248	227	209	194	181	149	110	88.2	64.5	51.0	42.3	36.4	32.1	28.7	23.7	20.3	12.9
HZY6-110	312	235	192	164	142	125	111	100	91.6	72.2	52.1	41.7	30.3	24.1	20.0	17.2	15.1	13.5	11.2	9.59	6.02
HZY6-155	334	269	230	200	178	160	145	134	124	101	74.9	60.3	43.5	34.3	28.5	24.6	21.9	19.7	16.5	14.3	9.39
HZY6-160	427	315	261	220	197	178	165	153	143	116	84.8	66.8	47.7	37.3	30.8	26.5	23.3	20.8	17.2	14.6	9.23
HZY6-200	402	324	277	243	221	203	187	171	158	127	92.3	73.8	53.1	41.9	34.6	29.7	26.0	23.5	19.5	16.7	10.8

End of Discharge Voltage = 1.70 — **DISCHARGE CURRENT in A** — **20 - 25 °C**

Model	5'	10'	15'	20'	25'	30'	35'	40'	45'	1 hr	90'	2 hr	3 hr	4 hr	5 hr	6 hr	7 hr	8 hr	10 hr	12 hr	20 hr
HZY6-7.5	18.7	13	10.4	8.83	7.65	6.91	6.34	5.89	5.53	4.70	3.35	2.66	1.91	1.51	1.25	1.07	0.95	0.85	0.71	0.60	0.38
HZY6-10	26.6	18.7	15.1	12.8	11.1	9.91	8.94	8.32	7.75	6.34	4.58	3.65	2.59	2.02	1.68	1.44	1.27	1.13	0.94	0.80	0.52
HZY6-12	32.3	22.6	18.1	15.3	13.3	11.8	10.7	9.87	9.13	7.54	5.42	4.25	3.07	2.41	2.00	1.72	1.51	1.35	1.12	0.96	0.61
HZY12-7.5	18.7	13	10.4	8.83	7.65	6.91	6.34	5.89	5.53	4.70	3.35	2.66	1.91	1.51	1.25	1.07	0.95	0.85	0.71	0.60	0.38
HZY12-12	32.3	22.6	18.1	15.3	13.3	11.8	10.7	9.87	9.13	7.54	5.42	4.25	3.07	2.41	2.00	1.72	1.51	1.35	1.12	0.96	0.61
HZY12-18	49.8	34.2	27.4	23.0	20.2	18.1	16.4	15.1	13.8	11.2	8.02	6.34	4.49	3.52	2.93	2.51	2.22	1.98	1.64	1.40	0.89
HZY12-26	72.4	52.2	42.0	35.3	30.5	26.9	24.2	22.0	20.1	16.2	11.8	9.42	6.81	5.37	4.43	3.77	3.29	2.95	2.40	2.05	1.31
HZY12-33	104	69.8	55.0	45.6	39.2	34.3	30.8	27.8	25.4	20.4	14.9	11.8	8.56	6.82	5.69	4.92	4.35	3.88	3.25	2.80	1.82
HZY12-44	121	94.6	74.6	61.4	52.8	46.3	41.5	37.4	34.2	27.4	20.0	15.9	11.4	8.96	7.36	6.30	5.54	4.95	4.11	3.51	2.27
HZY12-55	157	113	91.4	77.6	67.4	59.9	53.9	48.9	45.3	36.7	26.5	21.0	15.1	11.9	9.93	8.51	7.48	6.67	5.49	4.69	2.99
HZY12-60	200	149	116	95.5	80.5	69.7	61.4	55.3	50.0	39.4	28.6	22.8	16.7	13.6	11.5	10.1	9.04	8.17	6.91	5.95	3.82
HZY12-70J	180	138	114	96.2	83.6	73.9	66.8	61.1	56.1	45.3	32.3	25.1	17.6	13.9	11.6	9.93	8.70	7.75	6.39	5.49	3.58
HZY12-70	185	144	119	101	87.7	77.5	70.0	64.1	59.1	49.5	36.1	28.4	20.4	16.2	13.5	11.6	10.3	9.21	7.66	6.56	4.28
HZY12-80	193	149	125	107	94.6	84.9	77.1	71.6	66.0	54.2	39.0	30.7	21.8	17.1	14.2	12.2	10.7	9.52	7.90	6.79	4.39
HZY12-100	258	192	154	130	113	101	90.9	82.7	75.5	61.1	44.5	35.0	24.7	19.5	16.2	14.0	12.4	11.1	9.26	8.00	5.26
HZY12-110	280	208	171	145	127	113	101	91.6	83.9	67.9	49.4	39.5	28.4	22.4	18.8	16.2	14.2	12.7	10.6	9.12	5.93
HZY12-120	287	218	179	153	135	120	108	98.7	90.9	73.6	54.0	42.7	30.1	23.4	19.3	16.6	14.5	13.0	10.8	9.27	6.08
HZY12-135	339	248	212	187	169	153	140	128	118	96.8	70.1	55.6	40.3	32.1	26.6	22.8	19.9	17.8	14.6	12.5	8.07
HZY12-150	360	274	232	204	183	165	150	136	125	100	72.7	57.2	40.4	31.6	26.1	22.3	19.7	17.5	14.4	12.4	7.95
HZY12-160	379	294	257	226	200	180	164	148	136	110	82.0	66.2	48.1	38.2	31.7	27.2	23.7	21.2	17.5	14.9	9.55
HZY12-200	423	344	297	265	239	215	195	178	163	134	101	83.1	62.0	49.4	41.1	35.2	30.9	27.6	22.8	19.4	12.3
HZY12-230	436	357	310	279	254	232	214	198	185	153	112	90.1	66.0	52.1	43.3	37.2	32.8	29.3	24.3	20.8	13.1
HZY6-110	318	240	196	167	145	128	113	102	93.6	73.8	53.2	42.6	31.0	24.6	20.4	17.6	15.4	13.8	11.5	9.80	6.15
HZY6-155	357	280	236	204	181	163	148	136	125	103	76.4	61.2	44.0	34.8	29.0	25.1	22.2	20.0	16.8	14.6	9.60
HZY6-160	437	322	266	224	201	182	169	157	146	119	86.7	68.3	48.7	38.1	31.5	27.1	23.8	21.3	17.5	14.9	9.43
HZY6-200	411	331	283	249	226	207	191	175	161	130	94.4	75.4	54.3	42.8	35.4	30.3	26.6	24.0	19.9	17.1	11.1

End of Discharge Voltage = 1.67 — **DISCHARGE CURRENT in A** — **20 - 25 °C**

Model	5'	10'	15'	20'	25'	30'	35'	40'	45'	1 hr	90'	2 hr	3 hr	4 hr	5 hr	6 hr	7 hr	8 hr	10 hr	12 hr	20 hr
HZY6-7.5	18.9	13.1	10.5	8.91	7.72	6.97	6.40	5.94	5.58	4.74	3.38	2.68	1.92	1.52	-	-	-	-	-	-	-
HZY6-10	26.8	18.9	15.2	12.9	11.2	10.0	9.01	8.40	7.82	6.39	4.62	3.69	2.61	2.04	-	-	-	-	-	-	-
HZY6-12	32.6	22.8	18.2	15.4	13.4	11.9	10.8	9.96	9.21	7.61	5.46	4.29	3.09	2.43	-	-	-	-	-	-	-
HZY12-7.5	18.9	13.1	10.5	8.91	7.72	6.97	6.40	5.94	5.58	4.74	3.38	2.68	1.92	1.52	-	-	-	-	-	-	-
HZY12-12	32.6	22.8	18.2	15.4	13.4	11.9	10.8	9.96	9.21	7.61	5.46	4.29	3.09	2.43	-	-	-	-	-	-	-
HZY12-18	50.3	34.5	27.7	23.2	20.3	18.2	16.5	15.2	14.0	11.3	8.09	6.39	4.53	3.55	-	-	-	-	-	-	-
HZY12-26	73.1	52.7	42.3	35.6	30.8	27.2	24.4	22.1	20.3	16.4	11.9	9.50	6.87	5.42	-	-	-	-	-	-	-
HZY12-33	105	70.4	55.5	46.0	39.5	34.6	31.1	28.1	25.7	20.6	15.0	11.9	8.63	6.88	-	-	-	-	-	-	-
HZY12-44	123	95.4	75.2	61.9	53.2	46.7	41.9	37.7	34.5	27.6	20.2	16.0	11.5	9.04	-	-	-	-	-	-	-
HZY12-55	159	114	92.2	78.3	68.0	60.4	54.3	49.4	45.7	37.0	26.8	21.2	15.3	12.0	-	-	-	-	-	-	-
HZY12-60	202	150	117	96.3	81.2	70.3	61.9	55.7	50.5	39.7	28.8	23.0	16.9	13.7	-	-	-	-	-	-	-
HZY12-70J	182	139	115	97.0	84.3	74.5	67.4	61.6	56.6	45.7	32.6	25.4	17.8	14.0	-	-	-	-	-	-	-
HZY12-70	186	145	120	102	88.5	78.2	70.7	64.7	59.6	50.0	36.4	28.6	20.6	16.4	-	-	-	-	-	-	-
HZY12-80	195	150	126	108	95.4	85.6	77.8	72.2	66.5	54.6	39.4	31.0	22.0	17.3	-	-	-	-	-	-	-
HZY12-100	260	193	156	131	114	102	91.7	83.5	76.2	61.6	44.9	35.3	25.0	19.7	-	-	-	-	-	-	-
HZY12-110	283	210	173	147	128	114	102	92.4	84.7	68.5	49.8	39.8	28.6	22.6	-	-	-	-	-	-	-
HZY12-120	289	220	180	155	136	121	109	99.6	91.7	74.2	54.5	43.1	30.3	23.6	-	-	-	-	-	-	-
HZY12-135	342	250	214	189	170	155	141	130	119	97.7	70.7	56.1	40.7	32.4	-	-	-	-	-	-	-
HZY12-150	364	276	234	205	185	167	151	137	126	101	73.3	57.7	40.8	31.9	-	-	-	-	-	-	-
HZY12-160	382	296	259	228	202	182	165	149	137	111	82.8	66.8	48.5	38.6	-	-	-	-	-	-	-
HZY12-200	427	347	299	267	241	217	197	179	165	135	102	83.8	62.5	49.8	-	-	-	-	-	-	-
HZY12-230	440	360	313	281	256	234	216	200	187	154	113	90.9	66.5	52.6	-	-	-	-	-	-	-
HZY6-110	321	242	198	169	146	129	114	103	94.4	74.5	53.7	43.0	31.3	24.8	-	-	-	-	-	-	-
HZY6-155	363	285	239	206	183	164	149	137	126	103	76.8	61.5	44.2	35.1	-	-	-	-	-	-	-
HZY6-160	441	325	269	226	203	183	171	158	148	120	87.4	68.9	49.1	38.5	-	-	-	-	-	-	-
HZY6-200	414	334	286	251	228	209	193	176	163	131	95.2	76.1	54.8	43.2	-	-	-	-	-	-	-

End of Discharge Voltage = 1.65 — **DISCHARGE CURRENT in A** — **20 - 25 °C**

Model	5'	10'	15'	20'	25'	30'	35'	40'	45'	1 hr	90'	2 hr	3 hr	4 hr	5 hr	6 hr	7 hr	8 hr	10 hr	12 hr	20 hr
HZY6-7.5	18.9	13.2	10.6	8.94	7.75	7	6.42	5.96	5.6	4.76	3.39	2.69	1.93	1.53	-	-	-	-	-	-	-
HZY6-10	26.9	18.9	15.3	12.9	11.3	10.0	9.05	8.43	7.85	6.42	4.64	3.70	2.62	2.05	-	-	-	-	-	-	-
HZY6-12	32.7	22.9	18.3	15.5	13.5	11.9	10.8	10	9.25	7.64	5.49	4.31	3.11	2.44	-	-	-	-	-	-	-
HZY12-7.5	18.9	13.2	10.6	8.94	7.75	7	6.42	5.96	5.6	4.76	3.39	2.69	1.93	1.53	-	-	-	-	-	-	-
HZY12-12	32.7	22.9	18.3	15.5	13.5	11.9	10.8	10.0	9.25	7.64	5.49	4.31	3.11	2.44	-	-	-	-	-	-	-
HZY12-18	50.5	34.6	27.8	23.3	20.4	18.3	16.6	15.2	14.0	11.4	8.12	6.42	4.54	3.57	-	-	-	-	-	-	-
HZY12-26	73.4	52.9	42.5	35.7	30.9	27.3	24.5	22.2	20.4	16.5	11.9	9.54	6.90	5.44	-	-	-	-	-	-	-
HZY12-33	105	70.7	55.7	46.1	39.7	34.8	31.2	28.2	25.8	20.7	15.1	12.0	8.67	6.91	-	-	-	-	-	-	-
HZY12-44	123	95.8	75.5	62.2	53.4	46.9	42.0	37.9	34.7	27.7	20.2	16.1	11.6	9.07	-	-	-	-	-	-	-
HZY12-55	159	115	92.6	78.6	68.2	60.6	54.6	49.6	45.9	37.1	26.9	21.3	15.3	12.1	-	-	-	-	-	-	-
HZY12-60	203	151	118	96.7	81.5	70.6	62.2	56.0	50.7	39.9	28.9	23.1	17.0	13.7	-	-	-	-	-	-	-
HZY12-70J	183	140	115	97.4	84.7	74.8	67.6	61.9	56.9	45.8	32.7	25.5	17.9	14.1	-	-	-	-	-	-	-
HZY12-70	187	146	120	102	88.9	78.5	70.9	64.9	59.8	50.2	36.5	28.7	20.6	16.4	-	-	-	-	-	-	-
HZY12-80	195	151	127	109	95.8	86.0	78.1	72.5	66.8	54.9	39.5	31.1	22.1	17.3	-	-	-	-	-	-	-
HZY12-100	261	194	156	131	115	102	92.0	83.8	76.5	61.9	45.0	35.5	25.1	19.7	-	-	-	-	-	-	-
HZY12-110	284	211	173	147	128	114	103	92.7	85.0	68.8	50.0	40.0	28.7	22.7	-	-	-	-	-	-	-
HZY12-120	290	221	181	155	137	121	109	100	92.0	74.5	54.7	43.3	30.5	23.7	-	-	-	-	-	-	-
HZY12-135	343	251	215	190	171	155	142	130	120	98.1	71.0	56.3	40.8	32.5	-	-	-	-	-	-	-
HZY12-150	365	277	235	206	185	167	152	138	127	101	73.6	57.9	40.9	32.0	-	-	-	-	-	-	-
HZY12-160	384	298	260	229	203	183	166	150	137	111	83.1	67.1	48.7	38.7	-	-	-	-	-	-	-
HZY12-200	429	348	301	268	242	217	197	180	165	136	102	84.1	62.8	50.0	-	-	-	-	-	-	-
HZY12-230	442	362	314	283	257	235	217	201	187	155	114	91.3	66.8	52.8	-	-	-	-	-	-	-
HZY6-110	322	243	199	170	147	129	114	104	94.8	74.8	53.9	43.1	31.4	24.9	-	-	-	-	-	-	-
HZY6-155	369	289	241	208	185	166	150	138	127	104	77.3	61.8	44.4	35.3	-	-	-	-	-	-	-
HZY6-160	442	326	270	227	204	184	171	159	148	121	87.8	69.1	49.3	38.6	-	-	-	-	-	-	-
HZY6-200	416	335	287	252	229	210	194	177	163	131	95.6	76.4	55.0	43.4	-	-	-	-	-	-	-

End of Discharge Voltage = 1.60																						DISCHARGE CURRENT in A	20 - 25 °C
Model	**5'**	**10'**	**15'**	**20'**	**25'**	**30'**	**35'**	**40'**	**45'**	**1 hr**	**90'**	**2 hr**	**3 hr**	**4 hr**	**5 hr**	**6 hr**	**7 hr**	**8 hr**	**10 hr**	**12 hr**	**20 hr**		
HZY6-7.5	19.1	13.3	10.7	9.03	7.82	7.06	6.48	6.02	5.66	4.81	3.43	2.72	1.95	1.54	-	-	-	-	-	-	-		
HZY6-10	27.2	19.1	15.4	13.1	11.4	10.1	9.14	8.51	7.93	6.48	4.68	3.74	2.65	2.07	-	-	-	-	-	-	-		
HZY6-12	33	23.1	18.5	15.6	13.6	12	10.9	10.1	9.34	7.71	5.54	4.35	3.14	2.47	-	-	-	-	-	-	-		
HZY12-7.5	19.1	13.3	10.7	9.03	7.82	7.06	6.48	6.02	5.66	4.81	3.43	2.72	1.95	1.54	-	-	-	-	-	-	-		
HZY12-12	33.0	23.1	18.5	15.6	13.6	12.0	10.9	10.1	9.34	7.71	5.54	4.35	3.14	2.47	-	-	-	-	-	-	-		
HZY12-18	51.0	35.0	28.1	23.6	20.6	18.5	16.7	15.4	14.2	11.5	8.20	6.48	4.59	3.60	-	-	-	-	-	-	-		
HZY12-26	74.1	53.4	42.9	36.0	31.2	27.6	24.7	22.4	20.6	16.6	12.0	9.63	6.97	5.49	-	-	-	-	-	-	-		
HZY12-33	106	71.4	56.2	46.6	40.1	35.1	31.5	28.4	26.0	20.9	15.2	12.1	8.75	6.98	-	-	-	-	-	-	-		
HZY12-44	124	96.7	76.3	62.8	54.0	47.4	42.4	38.2	35.0	28.0	20.4	16.2	11.7	9.16	-	-	-	-	-	-	-		
HZY12-55	161	116	93.5	79.3	68.9	61.2	55.1	50.0	46.3	37.5	27.1	21.5	15.5	12.2	-	-	-	-	-	-	-		
HZY12-60	205	152	119	97.6	82.3	71.3	62.8	56.5	51.2	40.2	29.2	23.3	17.1	13.9	-	-	-	-	-	-	-		
HZY12-70J	184	141	116	98.3	85.5	75.6	68.3	62.5	57.4	46.3	33.0	25.7	18.0	14.2	-	-	-	-	-	-	-		
HZY12-70	189	147	121	103	89.7	79.3	71.6	65.6	60.4	50.7	36.9	29.0	20.8	16.6	-	-	-	-	-	-	-		
HZY12-80	197	153	128	110	96.7	86.8	78.8	73.2	67.4	55.4	39.9	31.4	22.3	17.5	-	-	-	-	-	-	-		
HZY12-100	264	196	158	132	116	103	92.9	84.6	77.2	62.5	45.5	35.8	25.3	19.9	-	-	-	-	-	-	-		
HZY12-110	287	213	175	149	130	115	104	93.6	85.8	69.4	50.5	40.4	29.0	22.9	-	-	-	-	-	-	-		
HZY12-120	293	223	183	157	138	122	110	101	92.9	75.2	55.2	43.7	30.8	23.9	-	-	-	-	-	-	-		
HZY12-135	346	253	217	191	172	157	143	131	121	99.0	71.7	56.9	41.2	32.8	-	-	-	-	-	-	-		
HZY12-150	369	280	238	208	187	169	154	139	128	102	74.3	58.5	41.3	32.3	-	-	-	-	-	-	-		
HZY12-160	388	300	263	232	205	184	167	151	139	112	83.9	67.7	49.2	39.1	-	-	-	-	-	-	-		
HZY12-200	433	351	304	271	245	219	199	182	167	137	103	85.0	63.4	50.5	-	-	-	-	-	-	-		
HZY12-230	446	365	317	285	259	237	219	203	189	156	115	92.2	67.5	53.3	-	-	-	-	-	-	-		
HZY6-110	326	245	201	171	148	131	116	105	95.7	75.5	54.4	43.6	31.7	25.2	-	-	-	-	-	-	-		
HZY6-155	380	296	245	210	186	167	152	139	129	105	78.0	62.3	44.8	35.5	-	-	-	-	-	-	-		
HZY6-160	447	329	272	230	206	186	173	160	150	122	88.6	69.8	49.8	39.0	-	-	-	-	-	-	-		
HZY6-200	420	338	290	254	231	212	195	179	165	132	96.5	77.1	55.5	43.8	-	-	-	-	-	-	-		

IMPORTANT NOTE: GEL batteries do not deliver full capacity on the first cycle, in fact they take approx. 15 to 20 cycles to reach full capacity. This reduced initial capacity effect is due to the extremely durable crystal structure employed in the Haze GEL range.The capacity quoted in this catalogue is full capacity.

End of Discharge Voltage = 1.85																						DISCHARGE IN WATTS PER CELL	20 - 25 °C
Model	**5'**	**10'**	**15'**	**20'**	**25'**	**30'**	**35'**	**40'**	**45'**	**1 hr**	**90'**	**2 hr**	**3 hr**	**4 hr**	**5 hr**	**6 hr**	**7 hr**	**8 hr**	**10 hr**	**12 hr**	**20 hr**		
HZY6-7.5	26.9	19.4	16.1	13.7	12.0	10.8	9.79	9.01	8.41	6.98	5.30	4.28	3.07	2.44	-	-	-	-	-	-	-		
HZY6-10	39.8	29.3	24.5	21.2	18.6	16.7	15.1	13.8	12.8	10.5	7.87	6.32	4.48	3.52	-	-	-	-	-	-	-		
HZY6-12	46.5	35.0	29.3	25.7	22.7	20.3	18.5	16.9	15.7	12.9	9.68	7.81	5.62	4.38	-	-	-	-	-	-	-		
HZY12-7.5	26.9	19.4	16.1	13.7	12.0	10.8	9.79	9.01	8.41	6.98	5.30	4.28	3.07	2.44	-	-	-	-	-	-	-		
HZY12-12	46.5	35.0	29.3	25.7	22.7	20.3	18.5	16.9	15.7	12.9	9.68	7.81	5.62	4.38	-	-	-	-	-	-	-		
HZY12-18	71.7	48.5	39.7	33.8	29.4	26.3	23.7	21.5	19.9	16.3	12.3	9.9	7.22	5.67	-	-	-	-	-	-	-		
HZY12-26	110	80.5	64.9	54.7	47.5	42.2	38.1	34.7	31.9	25.7	18.7	15.0	11.1	8.95	-	-	-	-	-	-	-		
HZY12-33	142	102	83.1	70.3	60.7	53.6	48.2	43.8	40.2	32.0	22.7	17.7	12.4	9.7	-	-	-	-	-	-	-		
HZY12-44	173	133	110	92.1	79.5	70.2	63.4	57.4	52.7	42.2	30.3	23.7	16.4	12.7	-	-	-	-	-	-	-		
HZY12-55	211	156	128	108	94	83.8	75.4	69.0	63.6	51.2	37.2	29.3	21.0	16.5	-	-	-	-	-	-	-		
HZY12-60	257	192	157	133	114	101	90.1	81.7	74.5	60.1	44.6	36.0	27.2	22.0	-	-	-	-	-	-	-		
HZY12-70J	250	190	161	138	122	110	100	92	85.3	68.8	49.4	38.1	26.6	20.5	-	-	-	-	-	-	-		
HZY12-70	255	195	164	142	125	112	102	93	86.5	69.7	50.1	39.0	27.3	21.0	-	-	-	-	-	-	-		
HZY12-80	267	213	179	153	136	123	113	104	97	79.1	57.3	44.7	31.1	24.2	-	-	-	-	-	-	-		
HZY12-100	377	273	227	194	170	151	138	126	117	95	69.8	55.1	39.0	30.5	-	-	-	-	-	-	-		
HZY12-110	412	310	256	218	191	170	153	140	129	104	75.9	60.2	42.4	33.1	-	-	-	-	-	-	-		
HZY12-120	434	342	286	244	213	192	174	160	148	119	87.2	68.9	48.2	37.3	-	-	-	-	-	-	-		
HZY12-135	456	335	289	257	232	212	196	183	171	140	102	79.8	55.2	42.5	-	-	-	-	-	-	-		
HZY12-150	500	382	325	286	258	235	215	197	183	149	108	84.7	58.8	45.7	-	-	-	-	-	-	-		
HZY12-160	489	396	344	303	276	254	235	216	202	166	122	96	67.8	53.2	-	-	-	-	-	-	-		
HZY12-200	553	461	401	357	324	299	277	259	241	199	145	114	80.7	63.6	-	-	-	-	-	-	-		
HZY12-230	588	492	424	380	344	317	296	276	261	219	161	127	89.4	70.2	-	-	-	-	-	-	-		
HZY6-110	420	314	264	226	198	176	159	145	133	107	77.4	61.4	43.2	33.8	-	-	-	-	-	-	-		
HZY6-155	477	403	366	333	303	281	260	242	227	191	149	122	90.0	69.9	-	-	-	-	-	-	-		
HZY6-160	554	422	365	326	296	271	250	231	215	175	127	100	69.7	54.7	-	-	-	-	-	-	-		
HZY6-200	564	444	380	342	310	288	268	251	235	194	141	111	80.0	63.4	-	-	-	-	-	-	-		

End of Discharge Voltage = 1.80																						DISCHARGE IN WATTS PER CELL	20 - 25 °C
Model	**5'**	**10'**	**15'**	**20'**	**25'**	**30'**	**35'**	**40'**	**45'**	**1 hr**	**90'**	**2 hr**	**3 hr**	**4 hr**	**5 hr**	**6 hr**	**7 hr**	**8 hr**	**10 hr**	**12 hr**	**20 hr**		
HZY6-7.5	31.1	21.4	17.5	14.8	12.9	11.5	10.3	9.5	8.83	7.28	5.51	4.44	3.18	2.52	-	-	-	-	-	-	-		
HZY6-10	44.2	31.9	26.5	22.7	19.8	17.6	15.9	14.5	13.4	11.0	8.27	6.60	4.69	3.66	-	-	-	-	-	-	-		
HZY6-12	53.7	37.7	30.8	26.9	23.6	21.2	19.3	17.6	16.3	13.4	10.0	8.07	5.78	4.52	-	-	-	-	-	-	-		
HZY12-7.5	31.1	21.4	17.5	14.8	12.9	11.5	10.3	9.52	8.83	7.28	5.51	4.44	3.18	2.52	-	-	-	-	-	-	-		
HZY12-12	53.7	37.7	30.8	26.9	23.6	21.2	19.3	17.6	16.3	13.4	10.0	8.07	5.78	4.52	-	-	-	-	-	-	-		
HZY12-18	76.6	51.8	42.4	36.1	31.4	28.0	25.3	23.0	21.3	17.4	13.1	10.6	7.71	6.06	-	-	-	-	-	-	-		
HZY12-26	117	86.0	69.3	58.5	50.8	45.1	40.7	37.1	34.1	27.4	20.0	16.1	11.9	9.6	-	-	-	-	-	-	-		
HZY12-33	151	109	88.8	75.0	64.8	57.3	51.5	46.7	42.9	34.2	24.3	18.9	13.2	10.4	-	-	-	-	-	-	-		
HZY12-44	185	142	117	98	84.9	75.0	67.7	61.3	56.3	45.1	32.4	25.3	17.5	13.6	-	-	-	-	-	-	-		
HZY12-55	226	166	137	116	101	89.5	80.6	73.7	67.9	54.7	39.8	31.3	22.4	17.6	-	-	-	-	-	-	-		
HZY12-60	275	205	167	142	122	108	96	87.2	79.6	64.2	47.7	38.5	29.0	23.5	-	-	-	-	-	-	-		
HZY12-70J	267	203	172	147	130	117	107	98	91.1	73.5	52.7	40.7	28.4	21.9	-	-	-	-	-	-	-		
HZY12-70	273	209	175	151	133	119	109	100	92.4	74.4	53.5	41.6	29.1	22.4	-	-	-	-	-	-	-		
HZY12-80	286	227	191	164	146	131	120	111	104	84.5	61.2	47.8	33.2	25.9	-	-	-	-	-	-	-		
HZY12-100	403	292	243	207	181	161	147	135	125	102	74.6	58.9	41.6	32.6	-	-	-	-	-	-	-		
HZY12-110	440	331	274	232	204	182	164	149	137	111	81.1	64.3	45.3	35.3	-	-	-	-	-	-	-		
HZY12-120	464	365	305	261	228	205	186	171	158	127	93.2	73.6	51.5	39.9	-	-	-	-	-	-	-		
HZY12-135	487	358	308	274	248	226	209	195	183	149	109	85.3	59.0	45.4	-	-	-	-	-	-	-		
HZY12-150	534	408	347	306	276	251	229	211	195	159	116	90.5	62.8	48.8	-	-	-	-	-	-	-		
HZY12-160	522	423	368	324	295	271	251	231	215	177	130	103	72.5	56.8	-	-	-	-	-	-	-		
HZY12-200	591	492	429	382	346	320	296	276	258	212	155	122	86.2	68.0	-	-	-	-	-	-	-		
HZY12-230	628	525	453	406	368	338	316	295	279	234	172	136	95	74.9	-	-	-	-	-	-	-		
HZY6-110	449	336	282	241	211	188	169	155	142	114	82.7	65.6	46.2	36.1	-	-	-	-	-	-	-		
HZY6-155	584	459	401	356	322	296	274	255	237	198	154	126	92.3	71.7	-	-	-	-	-	-	-		
HZY6-160	592	451	390	348	316	289	267	247	230	187	136	106	74.5	58.4	-	-	-	-	-	-	-		
HZY6-200	602	474	406	365	332	307	286	269	251	208	150	119	85.5	67.7	-	-	-	-	-	-	-		

End of Discharge Voltage = 1.75																						DISCHARGE IN WATTS PER CELL	20 - 25 °C
Model	**5'**	**10'**	**15'**	**20'**	**25'**	**30'**	**35'**	**40'**	**45'**	**1 hr**	**90'**	**2 hr**	**3 hr**	**4 hr**	**5 hr**	**6 hr**	**7 hr**	**8 hr**	**10 hr**	**12 hr**	**20 hr**		
HZY6-7.5	33.2	22.9	18.4	15.5	13.4	11.9	10.8	9.9	9.13	7.49	5.65	4.53	3.23	2.56	-	-	-	-	-	-	-		
HZY6-10	47.1	33.6	27.6	23.5	20.4	18.1	16.4	14.9	13.8	11.3	8.47	6.78	4.84	3.75	-	-	-	-	-	-	-		
HZY6-12	57.3	40.0	32.4	27.8	24.4	21.7	19.7	18.0	16.6	13.7	10.2	8.20	5.87	4.60	-	-	-	-	-	-	-		
HZY12-7.5	33.2	22.9	18.4	15.5	13.4	11.9	10.8	9.87	9.13	7.49	5.65	4.53	3.23	2.56	-	-	-	-	-	-	-		
HZY12-12	57.3	40.0	32.4	27.8	24.4	21.7	19.7	18.0	16.6	13.7	10.2	8.20	5.87	4.60	-	-	-	-	-	-	-		
HZY12-18	81.5	55.1	45.1	38.4	33.4	29.8	26.9	24.4	22.6	18.5	14.0	11.3	8.20	6.45	-	-	-	-	-	-	-		
HZY12-26	125	91.4	73.7	62.2	54.0	47.9	43.3	39.5	36.3	29.2	21.2	17.1	12.7	10.2	-	-	-	-	-	-	-		
HZY12-33	161	116	94.5	79.8	69.0	60.9	54.7	49.7	45.6	36.4	25.8	20.1	14.1	11.0	-	-	-	-	-	-	-		
HZY12-44	197	151	125	105	90.4	79.7	72.0	65.2	59.9	48.0	34.5	26.9	18.7	14.4	-	-	-	-	-	-	-		
HZY12-55	240	177	146	123	107	95.2	85.7	78.4	72.3	58.2	42.3	33.4	23.8	18.8	-	-	-	-	-	-	-		
HZY12-60	292	218	178	151	130	115	102	92.8	84.7	68.3	50.7	40.9	30.9	25.0	-	-	-	-	-	-	-		
HZY12-70J	284	216	183	157	138	125	113	104	96.9	78.2	56.1	43.4	30.2	23.3	-	-	-	-	-	-	-		
HZY12-70	290	222	186	161	142	127	116	106	98	79.2	56.9	44.3	31.0	23.9	-	-	-	-	-	-	-		
HZY12-80	304	242	204	174	155	140	128	118	110	89.9	65.1	50.9	35.3	27.5	-	-	-	-	-	-	-		
HZY12-100	429	310	258	220	193	172	157	144	133	109	79.3	62.7	44.3	34.7	-	-	-	-	-	-	-		
HZY12-110	468	352	291	247	217	193	174	159	146	118	86.3	68.4	48.2	37.6	-	-	-	-	-	-	-		
HZY12-120	494	388	325	277	242	218	198	182	168	136	99.1	78.3	54.8	42.4	-	-	-	-	-	-	-		
HZY12-135	518	381	328	292	264	240	223	208	195	159	115	90.7	62.8	48.3	-	-	-	-	-	-	-		
HZY12-150	568	434	369	325	293	267	244	224	208	169	123	96.3	66.8	51.9	-	-	-	-	-	-	-		
HZY12-160	556	450	391	345	314	289	267	246	229	188	138	110	77.1	60.4	-	-	-	-	-	-	-		
HZY12-200	629	524	456	406	368	340	315	294	274	226	165	129	91.7	72.3	-	-	-	-	-	-	-		
HZY12-230	668	559	482	432	391	360	336	314	296	249	183	144	102	79.7	-	-	-	-	-	-	-		
HZY6-110	478	357	300	257	225	200	180	164	151	121	88.0	69.8	49.1	38.4	-	-	-	-	-	-	-		
HZY6-155	662	495	423	373	335	305	283	262	244	203	157	129	94.1	73.0	-	-	-	-	-	-	-		
HZY6-160	630	480	415	370	336	307	284	262	244	199	144	113	79.2	62.2	-	-	-	-	-	-	-		
HZY6-200	641	505	432	389	353	327	305	286	267	221	160	126	90.9	72.1	-	-	-	-	-	-	-		

End of Discharge Voltage = 1.70																						DISCHARGE IN WATTS PER CELL	20 - 25 °C
Model	**5'**	**10'**	**15'**	**20'**	**25'**	**30'**	**35'**	**40'**	**45'**	**1 hr**	**90'**	**2 hr**	**3 hr**	**4 hr**	**5 hr**	**6 hr**	**7 hr**	**8 hr**	**10 hr**	**12 hr**	**20 hr**		
HZY6-7.5	35.3	24.3	19.2	16.0	13.8	12.3	11.0	10.0	9.33	7.65	5.73	4.59	3.28	2.59	-	-	-	-	-	-	-		
HZY6-10	50.1	35.2	28.3	24.0	20.7	18.4	16.6	15.1	13.9	11.4	8.60	6.88	4.91	3.81	-	-	-	-	-	-	-		
HZY6-12	60.9	41.5	33.7	28.6	24.7	22.1	20.0	18.3	16.9	13.8	10.3	8.28	5.96	4.68	-	-	-	-	-	-	-		
HZY12-7.5	35.3	24.3	19.2	16.0	13.8	12.3	11.0	10.0	9.33	7.65	5.73	4.59	3.28	2.59	-	-	-	-	-	-	-		
HZY12-12	60.9	41.5	33.7	28.6	24.7	22.1	20.0	18.3	16.9	13.8	10.3	8.28	5.96	4.68	-	-	-	-	-	-	-		
HZY12-18	83.2	56.3	46.1	39.2	34.2	30.5	27.5	25.0	23.1	18.9	14.3	11.5	8.38	6.59	-	-	-	-	-	-	-		
HZY12-26	127	93.5	75.3	63.6	55.2	49.0	44.2	40.3	37.1	29.8	21.7	17.5	12.9	10.4	-	-	-	-	-	-	-		
HZY12-33	164	118	96.6	81.6	70.5	62.3	55.9	50.8	46.6	37.2	26.4	20.5	14.4	11.3	-	-	-	-	-	-	-		
HZY12-44	201	154	127	107	92.3	81.5	73.6	66.6	61.2	49.1	35.2	27.5	19.1	14.8	-	-	-	-	-	-	-		
HZY12-55	246	181	149	126	110	97.3	87.6	80.2	73.9	59.5	43.2	34.1	24.4	19.2	-	-	-	-	-	-	-		
HZY12-60	298	223	182	154	133	117	105	94.9	86.6	69.8	51.8	41.8	31.6	25.5	-	-	-	-	-	-	-		
HZY12-70J	290	221	187	160	142	127	116	107	99.1	79.9	57.3	44.3	30.8	23.8	-	-	-	-	-	-	-		
HZY12-70	296	227	191	165	145	130	118	108	100	80.9	58.2	45.3	31.6	24.4	-	-	-	-	-	-	-		
HZY12-80	311	247	208	178	158	143	131	121	113	91.9	66.6	52.0	36.1	28.1	-	-	-	-	-	-	-		
HZY12-100	438	317	264	225	197	176	160	147	136	111	81.1	64.0	45.2	35.4	-	-	-	-	-	-	-		
HZY12-110	479	360	298	253	221	197	178	162	149	120	88.2	69.9	49.3	38.4	-	-	-	-	-	-	-		
HZY12-120	504	397	332	283	248	223	202	186	172	138	101	80.0	56.0	43.3	-	-	-	-	-	-	-		
HZY12-135	529	389	335	298	270	246	227	212	199	162	118	92.7	64.1	49.4	-	-	-	-	-	-	-		
HZY12-150	580	444	377	332	300	273	249	229	212	173	126	98.4	68.2	53.1	-	-	-	-	-	-	-		
HZY12-160	568	460	400	352	321	295	272	251	234	192	141	112	78.8	61.7	-	-	-	-	-	-	-		
HZY12-200	643	535	466	415	376	347	322	300	280	231	169	132	93.7	73.9	-	-	-	-	-	-	-		
HZY12-230	683	571	492	442	400	368	343	321	303	255	187	147	104	81.5	-	-	-	-	-	-	-		
HZY6-110	488	365	307	262	230	204	184	168	154	124	89.9	71.3	50.2	39.2	-	-	-	-	-	-	-		
HZY6-155	728	529	443	387	347	315	290	268	248	207	159	130	95.1	74.0	-	-	-	-	-	-	-		
HZY6-160	644	491	424	378	343	314	290	268	250	203	148	116	81.0	63.5	-	-	-	-	-	-	-		
HZY6-200	655	516	441	397	361	334	311	292	273	226	164	129	92.9	73.6	-	-	-	-	-	-	-		

End of Discharge Voltage = 1.67																						DISCHARGE IN WATTS PER CELL	20 - 25 °C
Model	**5'**	**10'**	**15'**	**20'**	**25'**	**30'**	**35'**	**40'**	**45'**	**1 hr**	**90'**	**2 hr**	**3 hr**	**4 hr**	**5 hr**	**6 hr**	**7 hr**	**8 hr**	**10 hr**	**12 hr**	**20 hr**		
HZY6-7.5	35.8	24.8	19.5	16.2	13.9	12.4	11.2	10.1	9.42	7.72	5.78	4.62	3.30	2.60	-	-	-	-	-	-	-		
HZY6-10	51.2	35.9	28.7	24.2	20.9	18.6	16.7	15.2	14.0	11.5	8.65	6.92	4.93	3.83	-	-	-	-	-	-	-		
HZY6-12	62.1	42.1	34.0	28.8	24.9	22.2	20.1	18.3	16.9	13.9	10.3	8.31	5.98	4.69	-	-	-	-	-	-	-		
HZY12-7.5	35.8	24.8	19.5	16.2	13.9	12.4	11.2	10.1	9.42	7.72	5.78	4.62	3.30	2.60	-	-	-	-	-	-	-		
HZY12-12	62.1	42.1	34.0	28.8	24.9	22.2	20.1	18.3	16.9	13.9	10.3	8.31	5.98	4.69	-	-	-	-	-	-	-		
HZY12-18	84.0	56.8	46.5	39.6	34.5	30.8	27.7	25.2	23.3	19.1	14.4	11.6	8.46	6.64	-	-	-	-	-	-	-		
HZY12-26	129	94.3	76.0	64.1	55.7	49.4	44.6	40.7	37.4	30.1	21.9	17.6	13.1	10.5	-	-	-	-	-	-	-		
HZY12-33	166	119	97.4	82.3	71.1	62.8	56.4	51.3	47.1	37.5	26.6	20.7	14.5	11.4	-	-	-	-	-	-	-		
HZY12-44	203	155	129	108	93.2	82.2	74.2	67.2	61.8	49.5	35.5	27.8	19.2	14.9	-	-	-	-	-	-	-		
HZY12-55	248	182	151	127	111	98.2	88.4	80.9	74.5	60.0	43.6	34.4	24.6	19.3	-	-	-	-	-	-	-		
HZY12-60	301	225	184	155	134	118	106	95.7	87.3	70.4	52.3	42.2	31.8	25.8	-	-	-	-	-	-	-		
HZY12-70J	293	223	189	162	143	128	117	108	99.9	80.6	57.8	44.7	31.1	24.0	-	-	-	-	-	-	-		
HZY12-70	299	229	192	166	146	131	119	109	101	81.7	58.7	45.7	31.9	24.6	-	-	-	-	-	-	-		
HZY12-80	313	249	210	180	160	144	132	122	114	92.7	67.2	52.4	36.4	28.4	-	-	-	-	-	-	-		
HZY12-100	442	320	266	227	199	177	161	148	137	112	81.8	64.6	45.6	35.7	-	-	-	-	-	-	-		
HZY12-110	483	363	300	255	223	199	180	164	151	121	88.9	70.5	49.7	38.8	-	-	-	-	-	-	-		
HZY12-120	509	400	335	286	250	225	204	188	173	140	102	80.7	56.5	43.7	-	-	-	-	-	-	-		
HZY12-135	534	393	338	301	272	248	229	214	201	164	119	93.5	64.7	49.8	-	-	-	-	-	-	-		
HZY12-150	585	448	380	335	302	275	251	231	214	174	127	99.2	68.8	53.5	-	-	-	-	-	-	-		
HZY12-160	573	464	403	355	324	298	275	254	236	194	143	113	79.5	62.3	-	-	-	-	-	-	-		
HZY12-200	648	540	470	418	379	351	325	303	283	233	170	133	94.5	74.5	-	-	-	-	-	-	-		
HZY12-230	689	576	497	445	403	371	346	324	306	257	189	149	105	82.2	-	-	-	-	-	-	-		
HZY6-110	493	368	310	265	232	206	186	169	156	125	90.7	71.9	50.7	39.6	-	-	-	-	-	-	-		
HZY6-155	751	542	450	394	352	319	293	270	250	208	160	131	95.6	74.3	-	-	-	-	-	-	-		
HZY6-160	649	495	428	381	346	317	292	271	252	205	149	117	81.7	64.1	-	-	-	-	-	-	-		
HZY6-200	661	520	445	401	364	337	314	295	275	228	165	130	93.8	74.3	-	-	-	-	-	-	-		

End of Discharge Voltage = 1.65																						DISCHARGE IN WATTS PER CELL	20 - 25 °C
Model	**5'**	**10'**	**15'**	**20'**	**25'**	**30'**	**35'**	**40'**	**45'**	**1 hr**	**90'**	**2 hr**	**3 hr**	**4 hr**	**5 hr**	**6 hr**	**7 hr**	**8 hr**	**10 hr**	**12 hr**	**20 hr**		
HZY6-7.5	36.3	25.2	19.8	16.4	14.1	12.5	11.3	10.3	9.51	7.78	5.82	4.65	3.32	2.62	-	-	-	-	-	-	-		
HZY6-10	52.2	36.5	29.0	24.5	21.1	18.7	16.8	15.3	14.1	11.5	8.69	6.96	4.95	3.85	-	-	-	-	-	-	-		
HZY6-12	63.2	42.7	34.3	29.0	25.0	22.3	20.2	18.4	17.0	13.9	10.4	8.35	6.00	4.71	-	-	-	-	-	-	-		
HZY12-7.5	36.3	25.2	19.8	16.4	14.1	12.5	11.3	10.3	9.51	7.78	5.82	4.65	3.32	2.62	-	-	-	-	-	-	-		
HZY12-12	63.2	42.7	34.3	29.0	25.0	22.3	20.2	18.4	17.0	13.9	10.4	8.35	6.00	4.71	-	-	-	-	-	-	-		
HZY12-18	84.3	57.0	46.7	39.7	34.6	30.9	27.8	25.3	23.4	19.2	14.4	11.6	8.49	6.67	-	-	-	-	-	-	-		
HZY12-26	129	94.6	76.3	64.4	55.9	49.6	44.8	40.9	37.5	30.2	22.0	17.7	13.1	10.5	-	-	-	-	-	-	-		
HZY12-33	166	120	97.8	82.6	71.4	63.1	56.7	51.5	47.2	37.7	26.7	20.8	14.6	11.4	-	-	-	-	-	-	-		
HZY12-44	204	156	129	108	93.5	82.5	74.5	67.5	62.0	49.7	35.7	27.9	19.3	14.9	-	-	-	-	-	-	-		
HZY12-55	249	183	151	127	111	98.5	88.7	81.2	74.8	60.2	43.8	34.5	24.7	19.4	-	-	-	-	-	-	-		
HZY12-60	302	226	184	156	134	119	106	96.1	87.7	70.7	52.5	42.3	32.0	25.9	-	-	-	-	-	-	-		
HZY12-70J	294	224	190	162	143	129	117	108	100	80.9	58.1	44.9	31.2	24.1	-	-	-	-	-	-	-		
HZY12-70	300	230	193	167	147	131	120	110	102	82.0	58.9	45.9	32.1	24.7	-	-	-	-	-	-	-		
HZY12-80	314	250	211	180	160	145	132	122	114	93.0	67.4	52.6	36.6	28.5	-	-	-	-	-	-	-		
HZY12-100	444	321	267	228	199	178	162	149	138	112	82.1	64.8	45.8	35.9	-	-	-	-	-	-	-		
HZY12-110	485	365	301	256	224	200	180	165	151	122	89.3	70.8	49.9	38.9	-	-	-	-	-	-	-		
HZY12-120	511	402	336	287	251	226	205	188	174	140	103	81.0	56.7	43.9	-	-	-	-	-	-	-		
HZY12-135	536	394	339	302	273	249	230	215	201	164	119	93.9	65.0	50.0	-	-	-	-	-	-	-		
HZY12-150	588	450	382	337	304	276	252	232	215	175	127	99.6	69.1	53.7	-	-	-	-	-	-	-		
HZY12-160	575	466	405	357	325	299	276	255	237	195	143	113	79.8	62.5	-	-	-	-	-	-	-		
HZY12-200	651	542	472	420	381	352	326	304	284	234	171	134	94.9	74.8	-	-	-	-	-	-	-		
HZY12-230	692	578	498	447	405	373	348	325	307	258	189	149	105	82.5	-	-	-	-	-	-	-		
HZY6-110	494	369	311	266	233	207	186	170	156	125	91.1	72.2	50.9	39.7	-	-	-	-	-	-	-		
HZY6-155	775	554	457	400	357	323	296	272	252	210	160	132	96.0	74.6	-	-	-	-	-	-	-		
HZY6-160	652	497	430	383	348	318	293	272	253	206	149	117	82.0	64.4	-	-	-	-	-	-	-		
HZY6-200	663	522	447	402	365	338	315	296	277	229	166	131	94.1	74.6	-	-	-	-	-	-	-		

End of Discharge Voltage = 1.60																					DISCHARGE IN WATTS PER CELL	20 - 25 °C
Model	**5'**	**10'**	**15'**	**20'**	**25'**	**30'**	**35'**	**40'**	**45'**	**1 hr**	**90'**	**2 hr**	**3 hr**	**4 hr**	**5 hr**	**6 hr**	**7 hr**	**8 hr**	**10 hr**	**12 hr**	**20 hr**
HZY6-7.5	38.4	26.3	20.4	16.8	14.4	12.8	11.5	10.5	9.63	7.89	5.88	4.7	3.34	2.63	-	-	-	-	-	-	-
HZY6-10	54.6	37.9	29.7	24.9	21.5	19.0	17.0	15.5	14.3	11.6	8.77	7.02	5.00	3.89	-	-	-	-	-	-	-
HZY6-12	66.4	43.6	35	29.3	25.3	22.5	20.3	18.6	17.2	14.0	10.5	8.42	6.03	4.74	-	-	-	-	-	-	-
HZY12-7.5	38.4	26.3	20.4	16.8	14.4	12.8	11.5	10.5	9.63	7.89	5.88	4.70	3.34	2.63	-	-	-	-	-	-	-
HZY12-12	66.4	43.6	35.0	29.3	25.3	22.5	20.3	18.6	17.2	14.0	10.5	8.42	6.03	4.74	-	-	-	-	-	-	-
HZY12-18	85.1	57.6	47.1	40.1	34.9	31.2	28.1	25.5	23.6	19.3	14.6	11.8	8.57	6.74	-	-	-	-	-	-	-
HZY12-26	130	95.6	77.0	65.0	56.5	50.1	45.2	41.3	37.9	30.5	22.2	17.9	13.2	10.6	-	-	-	-	-	-	-
HZY12-33	168	121	99	83.4	72.1	63.7	57.2	52.0	47.7	38.0	27.0	21.0	14.7	11.5	-	-	-	-	-	-	-
HZY12-44	206	158	130	109	94.4	83.3	75.2	68.1	62.6	50.2	36.0	28.1	19.5	15.1	-	-	-	-	-	-	-
HZY12-55	251	185	153	129	112	99.5	89.6	82.0	75.5	60.8	44.2	34.9	24.9	19.6	-	-	-	-	-	-	-
HZY12-60	305	228	186	157	136	120	107	97.0	88.5	71.4	53.0	42.8	32.3	26.1	-	-	-	-	-	-	-
HZY12-70J	297	226	191	164	145	130	119	109	101	81.7	58.6	45.3	31.5	24.3	-	-	-	-	-	-	-
HZY12-70	303	232	195	168	148	133	121	111	103	82.8	59.5	46.3	32.4	24.9	-	-	-	-	-	-	-
HZY12-80	318	253	213	182	162	146	134	123	115	93.9	68.1	53.1	36.9	28.7	-	-	-	-	-	-	-
HZY12-100	448	324	270	230	201	180	164	150	139	113	82.9	65.5	46.3	36.2	-	-	-	-	-	-	-
HZY12-110	489	368	304	258	226	202	182	166	153	123	90.1	71.5	50.4	39.3	-	-	-	-	-	-	-
HZY12-120	516	406	339	290	253	228	207	190	176	142	104	81.8	57.2	44.3	-	-	-	-	-	-	-
HZY12-135	541	398	343	305	276	251	233	217	203	166	121	94.8	65.6	50.5	-	-	-	-	-	-	-
HZY12-150	593	454	385	340	306	279	255	234	217	177	129	101	69.8	54.3	-	-	-	-	-	-	-
HZY12-160	581	470	409	360	328	302	279	257	240	197	144	115	80.6	63.1	-	-	-	-	-	-	-
HZY12-200	657	547	477	424	384	355	329	307	286	236	172	135	95.8	75.6	-	-	-	-	-	-	-
HZY12-230	698	584	503	451	409	376	351	328	310	260	191	151	106	83.3	-	-	-	-	-	-	-
HZY6-110	499	373	314	268	235	209	188	172	158	126	92.0	72.9	51.3	40.1	-	-	-	-	-	-	-
HZY6-155	806	566	467	405	362	327	299	274	254	213	162	133	97.0	75.3	-	-	-	-	-	-	-
HZY6-160	658	502	434	387	351	321	296	274	255	208	151	118	82.8	65.0	-	-	-	-	-	-	-
HZY6-200	670	527	451	406	369	342	318	299	279	231	167	132	95.0	75.3	-	-	-	-	-	-	-

IMPORTANT NOTE: GEL batteries do not deliver full capacity on the first cycle, in fact they take approx. 15 to 20 cycles to reach full capacity. This reduced initial capacity effect is due to the extremely durable crystal structure employed in the Haze GEL range.The capacity quoted in this catalogue is full capacity.

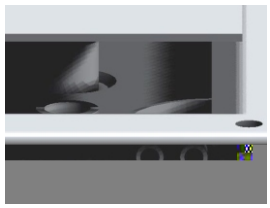

Central Gassing - Haze produce some models with a integral central gassing system. This system is a useful feature when batteries are installed in an IP66 cabinet. Sealing prevents any escaping gas from exiting the enclosure.
Central gassing allows a tube carrying the emissions to pass through a seal to atmosphere.
Haze are adding this feature to a number of sizes, if you require this feature please contact us for an up-to-date list of models included.

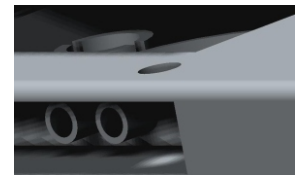

Battery Model	Qty Per Box	Dimensions (mm) & weight (Kg)				Dimensions (Inches) & weight (Lbs)				Terminal Details	BCI Group Size	Internal Resistance mOhms	Maximum Charge Current	CCA at 0 °C	Short Circuit Amps
		Length	Width	Height	Weight	Length	Width	Height	Weight						
HZY6-7.5	10	150	34	94 (100)	1.2	5.91	1.34	3.7 (3.9)	2.7	B-T1	_	18	1.5	NA	275
HZY6-10	10	151	50	96 (102)	1.9	5.94	1.97	3.8 (4.0)	4.2	B-T1	_	15	2	NA	325
HZY6-12	10	151	50	96 (104)	1.8	5.94	1.97	3.8(4.1)	4.0	B-T2	_	13	2.4	NA	500
HZY12-7.5	8	151	65	94 (102)	2.4	5.94	2.56	3.7 (4.0)	5.3	D-T1	_	40	1.5	NA	275
HZY12-12	4	150	97	96 (104)	3.7	5.91	3.82	3.8(4.1)	8.2	D-T2	_	24	2.4	NA	500
HZY12-18	2	181	76	167	5.5	7.13	2.99	6.57	12.2	C - M5	_	16	4.5	137	700
HZY12-26	1	178	168	124	8.8	7.01	6.61	4.88	19.4	C - M5	_	9.5	6.5	217	900
HZY12-33	1	195	130	160	10.2	7.68	5.12	6.30	22.5	B - M6	U1	10.6	8	260	1100
HZY12-44	1	198	167	157	13.5	7.80	6.57	6.18	29.8	C - M6	_	8	11	337	1400
HZY12-55	1	229	138	213	16.8	9.02	5.43	8.39	37.1	B - M6	22NF	7	14	444	1700
HZY12-60	1	228	139	217	21.5	8.98	5.47	8.54	47.5	B - M6	_	6.5	14	563	1750
HZY12-70J	1	349	168	175	22.6	13.74	6.61	6.89	49.9	C - M6	_	5.3	18	530	2100
HZY12-70	1	260	168	211	25.1	10.24	6.61	8.31	55.5	B - M6	24	5.2	18	535	2100
HZY12-80	1	260	168	211	24.0	10.24	6.61	8.31	53.0	B - M6	24	5.7	20	600	2400
HZY12-100	1	306	168	211	28.3	12.05	6.61	8.31	62.5	B - M6	27	4.7	25	715	2900
HZY12-110	1	329	173	209	30.9	12.95	6.81	8.23	68.3	B - M6	31	4.4	27	766	3000
HZY12-115	1	349	174	216.5	37.0	13.74	6.85	8.52	81.8	B - M6	_	3.4	28	980	3100
HZY12-120	1	408	176	227	34.5	16.06	6.93	8.94	76.2	B - M6	_	3.7	30	835	3300
HZY12-135	1	340	173	283	41.9	13.39	6.81	11.14	92.6	B - M6	_	4	35	906	3750
HZY12-150	1	482	170	242	45.0	18.98	6.69	9.53	99.5	B - M6	_	3.3	38	919	4200
HZY12-160	1	530	209	214	54.9	20.87	8.23	8.43	121.3	E - M6	4D	3.1	40	938	4700
HZY12-200	1	520	240	220	63.3	20.47	9.45	8.66	139.9	E - M8	_	2.88	50	988	5400
HZY12-230	1	521	269	203	74.5	20.51	10.59	7.99	164.6	E - M8	8D	2.3	57	1007	5900
HZY6-110	1	193	168	205	17.9	7.60	6.61	8.07	39.6	A - M6	_	1.8	27	789	3200
HZY6-155	1	282	177	280	31.0	11.10	6.97	11.02	68.5	A - M8	_	1.7	45	955	4900
HZY6-160	1	298	171	226	26.9	11.73	6.73	8.90	59.4	A - M6	_	1.7	40	966	4600
HZY6-200	1	323	178	225	31.1	12.72	7.01	8.86	68.7	A - M8	_	1.4	50	978	5000

Standard terminal is threaded insert style

Terminal Layout details

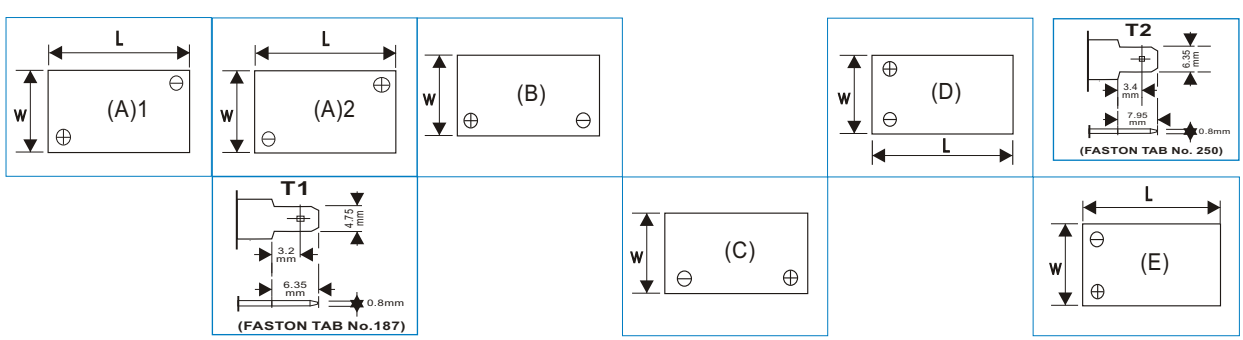

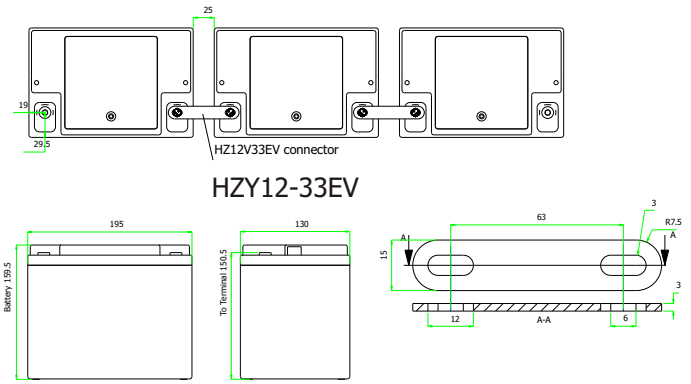

HZY12-33EV

Battery installations have many variables : space available, autonomy times, load carrying requirements etc.

Haze Engineering department is at the customers disposal to find the best solution, provide dimensioned layout drawings and wiring diagrams.

A tailor made solution to meet the customers requirements.

All drawings are submitted for customer approval to ensure trouble free installation.

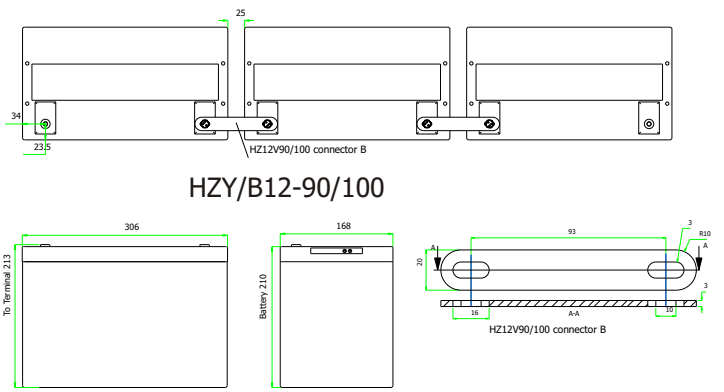

HZY/B12-90/100

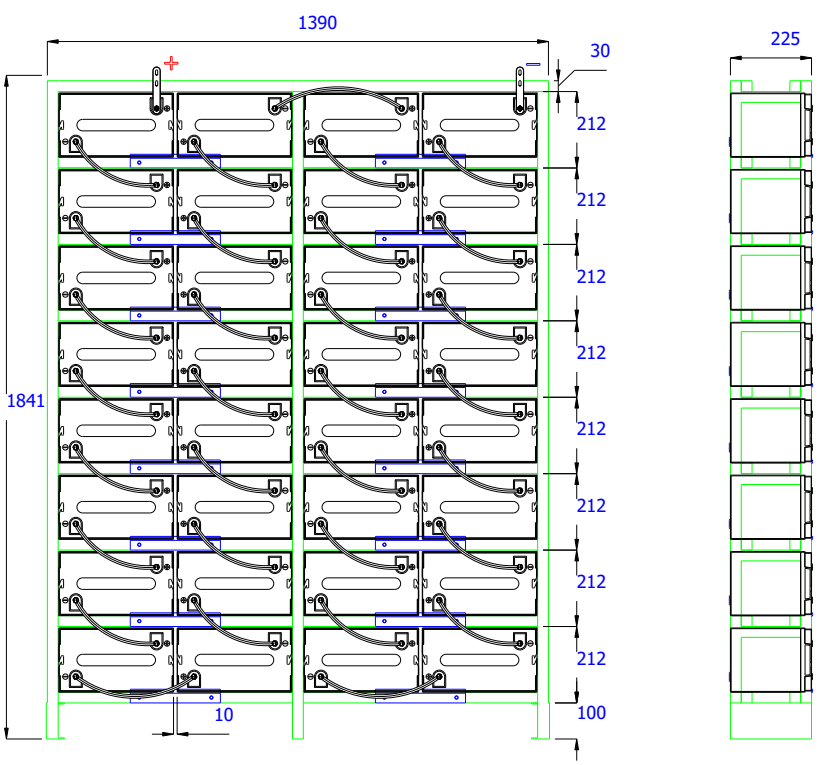

Racking is available to suit available space and required configuration.

Special cables and / or standard connectors can be provided on request along with wiring diagrams.

A range of terminal covers are available to cover large and small batteries and cables or connectors.

The example rack shown is for HZB/Y6-200.

Haze Battery Company Ltd

Product Range

4, 6 & 12 Volt AGM 1.3 to 230AH
6 & 12 Volt Gel 7.5 to 230AH
12 Volt Front Access AGM
12 Volt Front Access Gel
2 Volt AGM & Gel 50 to 3850AH
EV Gel
EV AGM
Marine Gel
Solar
OPzV
OPzS

Website: www.hazebattery.com
E mail sales@hazebattery.com

160514

Haze Battery Company keenly encourages environmental awareness; PLEASE follow guidelines for the recycling /disposal of lead.